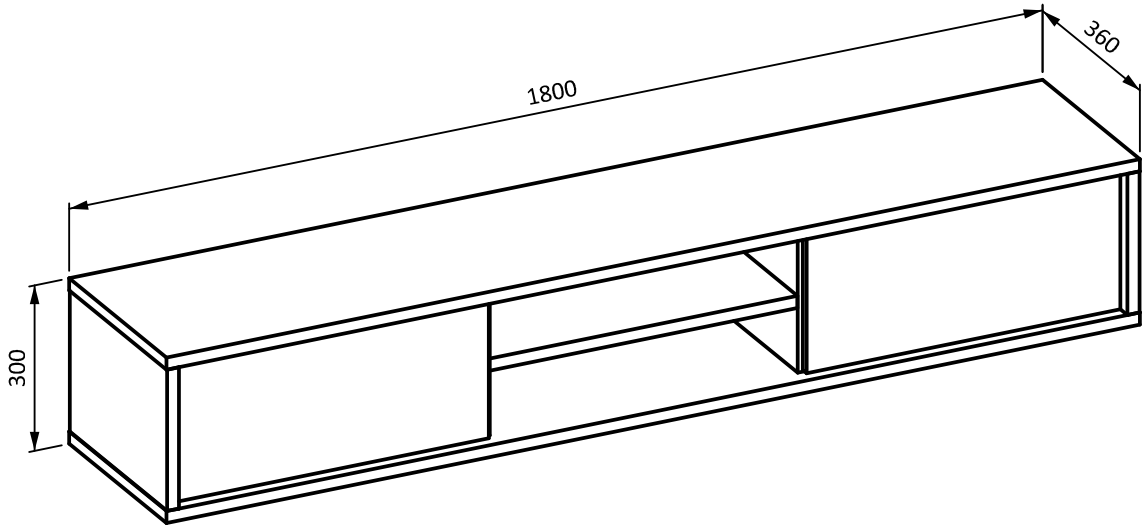


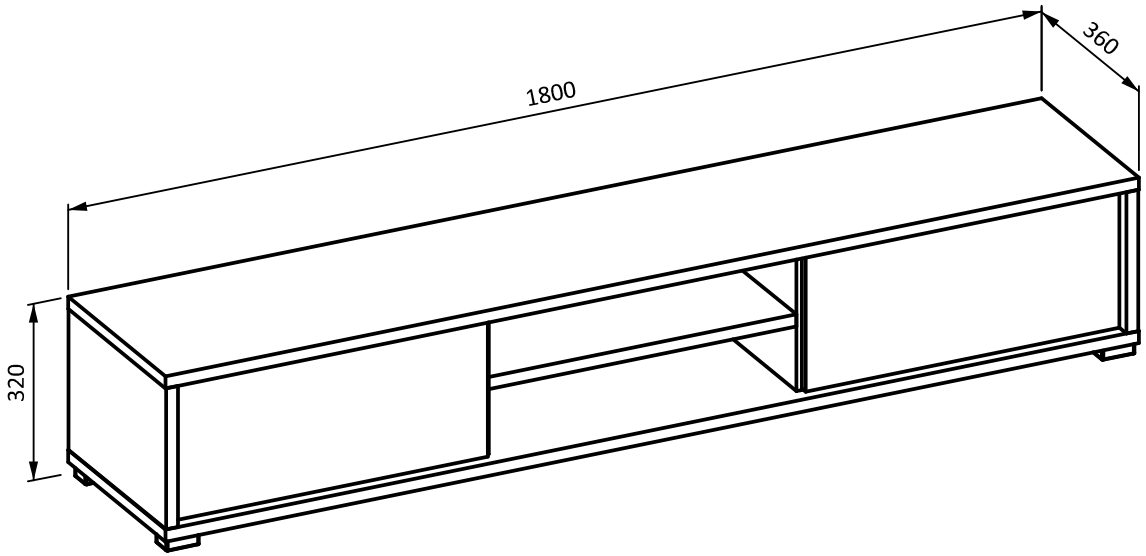


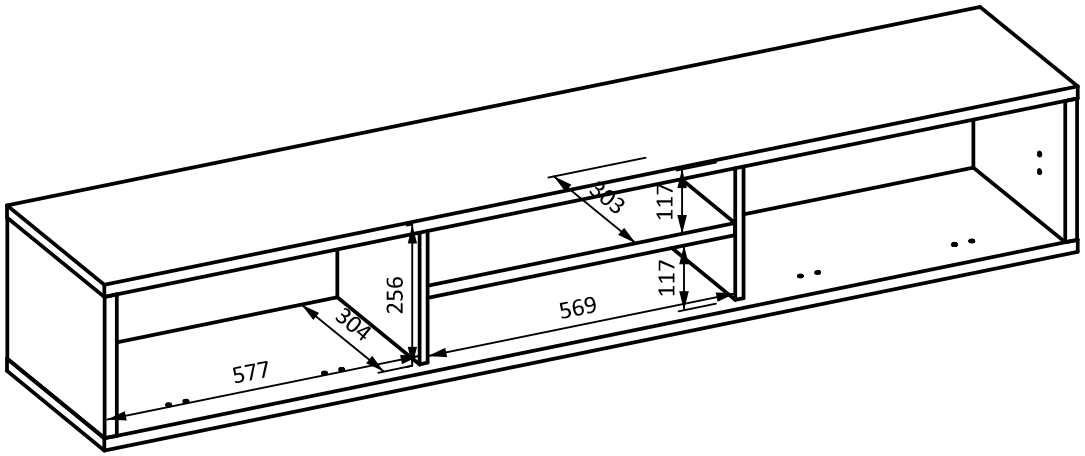


FRIDA 40

14/03/2023